CHARDON GROUP

35-TB600

600A/900A 35 kV Class T-Body Deadbreak Connector



www.chardongroup.com

APPLICATION

The Chardon 600A/ 900A, 35kV Class T-Body Deadbreak Connector is used to terminate high-voltage underground cables to deadfront apparatus such as transformers, switches and switchgear. It is fully shielded, submersible, and meets the requirements of IEEE Std 386™standard– Separable Insulated Connector Systems.

The capacitive test point on the insulating plug provides a means of testing the circuit without disturbing the bolted connection. In addition to the capacitive test point feature on the insulating plug, Chardon offers an optional capacitive test point on the T-Body connector. This allows the use of fault indicators, and provides a hotstick operable means of determining circuit condition when used with high impedance voltage sensing devices designed for test points.

T-Body Connec tors are designed for use on solid dielectric cable (XLPE or EPR) with extruded semi - conductive shields and concentric neutral, with or without a jacket. Installation on jacketed concentric neutral cable may require additional sealing material. Aspecial grounding adapter is available for tape shield, linear corrugated, unishield, and drain wire cables for use with Deadbreak connectors.

KEY FEATURES

- 100% factory production testing for partial discharge and AC withstand per IEEE 386.
- Peroxide cured EPDM rubber provides low tension set and high dielectric strength.
- Optional selection of test point installed to provide voltage indication.
- Molded semiconducting shield provides ground shield continuity per the requirements of IEEE 592.
- Grounding Tab and Stress Relief Cone design provide operational safety.
- Fully meets IEEE 386–2006 specifications.

PRODUCT RATINGS

Voltage Class	35 kV
Max. Rating Phase to Ground	21.1 kV
AC 1 Minute Withstand	70 kV
DC 15 Minute Withstand	103 kV
BIL and Full Wave Crest	200 kV
Partial Discharge	26 kV≤5 pC
Continuous	600Arms
24 Hour Overload	1,000Arms
Short Time	25,000 amps rms symmetrical for 0.17 10,000 amps rms symmetrical for 3.0 s

Voltage/Current ratings and characteristics are in accordance with IEEE Std 386 standard.

• Review Date: 11.11.2026

PRODUCTION TESTS

Tests conducted in accordance with IEEE Standard 386.

- AC 60 Hz 1 Minute Withstand - 70kV
- Partial Discharge – 26kV ≤5 pC

Tests conducted in accordance with Chardon Manufacturing Process requirements:

- Physical Inspection
- Periodic Dissection
- Periodic X-ray Analysis

T-BODY KIT CONTENT

Tests conducted in accordance with IEEE Standard 386.

- T-Body
- Insulating Plug (Al for 600A, Cu for 900A)
- Cable Adapter
- Stud
- Compression Lug (Al for 600A, Cu for 900A)
- Silicone Grease

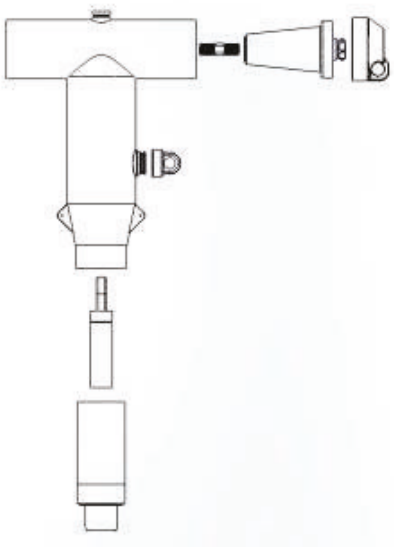

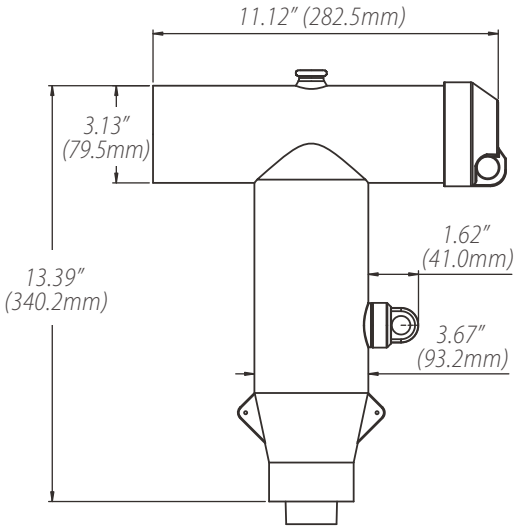

DETAILED COMPOSITION OF THE CHARDON T-BODY DEADBREAK CONNECTOR

T-BODY CONNECTOR BODY

Molded T-body adapts to all cable sizes and provides a dead front shielded connection.

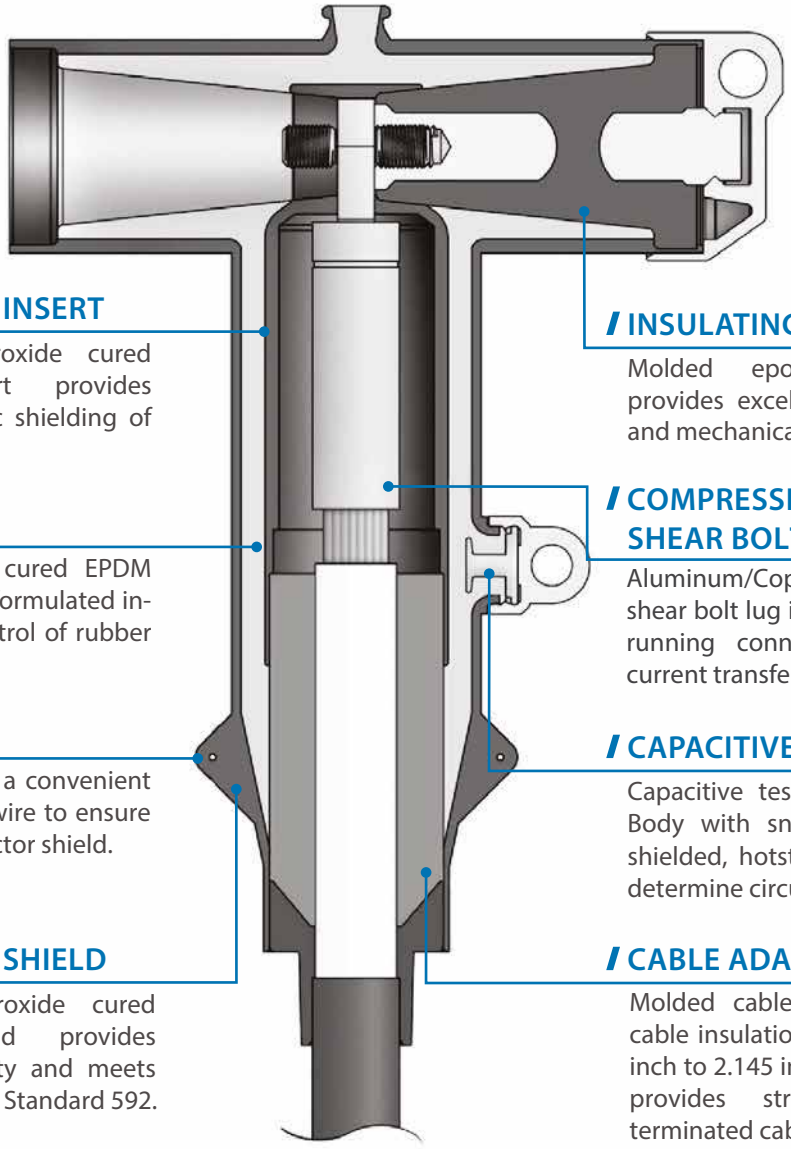

SEMICONDUCTING INSERT

Precision molded peroxide cured semiconducting insert provides corona-free electrostatic shielding of the compression lug.

INSULATION LAYER

High quality peroxide cured EPDM Insulation is mixed and formulated in-house for complete control of rubber characteristics.

DRAIN WIRE TABS

Drain wire tabs provide a convenient point to connect drain wire to ensure grounding of the connector shield.

SEMICONDUCTING SHIELD

Precision molded peroxide cured semiconducting shield provides ground shield continuity and meets the requirements of IEEE Standard 592.

INSULATING PLUG

Molded epoxy insulating plug provides excellent electrical, thermal and mechanical reliability.

COMPRESSION LUG/ SHEAR BOLT LUG

Aluminum/Copper compression lug or shear bolt lug is sized to ensure a cool running connector with maximum current transfer.

CAPACITIVE TEST POINT

Capacitive test point on molded T-Body with snap-on cap provides a shielded, hotstick operable means to determine circuit condition.

CABLE ADAPTER

Molded cable adapter, sized to fit cable insulation diameters from 0.750 inch to 2.145 inches (19.1 to 54.5 mm), provides stress relief for the terminated cable.

ORDERING INFORMATION

35-TB	_ _ _ _	_	_ _ _ _
	STEP1	STEP2	STEP3

STEP1 _ _ _ _

Selection of Current Rating

Code	Description
600T	600AMP WITH Test Point
900T	900AMP WITH Test Point

Note :
(1) 600A compression lugs are made from aluminum.
(2) 600A insulating plugs include an aluminum lug.
(3) 900A compression lugs are made from copper.
(4) 900A insulating plugs include a copper lug.

STEP2 _

Selection of Cable Insulation Dimension

Range Code	Inches	mm
D	0.750 - 0.985	19.1 - 25.0
E	0.930 - 1.040	23.6 - 26.4
F	0.980 - 1.115	24.9 - 28.3
G	1.040 - 1.175	26.4 - 29.9
H	1.095 - 1.240	27.8 - 31.5
J	1.160 - 1.305	29.5 - 33.2
K	1.220 - 1.375	31.0 - 34.9
L	1.285 - 1.395	32.6 - 35.4
M	1.355 - 1.520	34.4 - 38.6
N	1.485 - 1.595	37.7 - 40.5
P	1.530 - 1.640	38.9 - 41.7
Q	1.575 - 1.685	40.0 - 42.8
R	1.665 - 1.785	42.3 - 45.3
S	1.755 - 1.875	44.6 - 47.6
T	1.845 - 1.965	46.9 - 49.9
U	1.935 - 2.055	49.1 - 52.2
V	2.025 - 2.145	51.4 - 54.5

35-TB	_ _ _ _	_	_ _ _ _
	STEP1	STEP2	STEP3

STEP3 _ _ _ _

Selection of Conductor Size (Al, Cu or Bi-Metal), add B in end of part number if a bi-metal lug is required. For example. 0002B; add C in end of part number if a Copper lug is required. For example. part number. 0002C; add Al in end of part number if a Aluminum lug is required. For example. 0002A. When selecting a shear bolt lug, use"shear bolt lug conductor code chart" and add SBC in the end of part number. For example, SBC-B-25-50/1-AL.

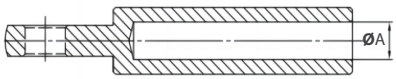

Conductor Code Table

CONDUCTOR CODE	Concentric or Compressed		Compactor Solid		Inner Diameter ØA(mm)
	AWG or kcmil	mm^2	AWG or kcmil	mm^2	Copper/Bi-metal/Aluminum Lug
0002	#2	35	#1	-	7.90
0001	#1	-	1/0	50	8.70
0010	1/0	50	2/0	70	10.02
0020	2/0	70	3/0	-	11.10
0030	3/0	-	4/0	95	12.40
0040	4/0	95	250	120	13.90
0250	250	120	300	150	15.00
0300	300	150	350	-	16.40
0350	350	-	400	185	17.90
0400	400	185	450/500	-	19.30
0450	450	-	500/550	240	20.10
0500	500	240	600	300	21.50
0550	550	-	650	-	22.60
0600	600	300	700	-	23.30
0650	650	-	750	400	24.10
0750	750	400	800	-	26.20
0800	800	-	900	-	27.10
0900	900	-	1000	500	28.70
1000	1000	500	-	-	30.20

Note :
Aluminum lug and Bi-metal lug for use on copper and aluminum conductors. Copper lug for use on copper conductors only.

Chardon Shear Bolt Lug

Example:
For a Shear Bolt Lug with a conductor range between 20-50 mm^2, the part number would be : SBC-B-25-50/1-AL.

Catalog No.	Conductor Range(mm^2)
SBC-B-25-50/1-AL	25-50
SBC-B-70-120/2-AL	70-120
SBC-B-150-240/2-AL	150-240
SBC-B-120-300/2-AL	120-300
SBC-B-300-400/3-AL	300-400



ORDERING EXAMPLE

An 35 kV Elbow, with a test point, and with copper lug required cable insulation dimension of 1.65 inches, and the compressed cable conductor size type is 550, the part number would be as follows:

35 - TB	600T	Q	0550C

If a shear bolt lug is selected in this kit, the part number would be as follows:

35 - TB	600T	Q	SBC-B-25-50/1-AL

The part number includes the insulating plug, cap, and stud.

Note :
If you require a T-body installed with LRTP, a threaded lug is necessary for the installation. Please notify your local agent or Chardon of the need for this threaded lug.



ANHUI CHARDON ELECTRIC LTD.

No.808 Taiji Road Economic Develop Zone of Guangde County
Anhui China
Tel: 0563-2216688
Fax: 0563-2251806

CHARDON TAIWAN CORPORATION

No.37 Min-Chie Road, Tung Lo Industrial Park, Miao Li, Taiwan 366
Tel:+886-37-984385
Fax:+886-37-984770

SHANGHAI CHARDON ELECTRIC LTD.

Room 1202, office building No.399, Yun Gu Road,Jiading district,
Shanghai, China 201801
Tel: +86-21-39105900
Fax: +86-21-39105916

www.chardongroup.com·info@chardongroup.com