CHARDON GROUP

25-LFE200/
28-LEF200

25 kV &28 kV Class Fused Loadbreak Elbow Connector with Interchangeable Fuse Capability



www.chardongroup.com

APPLICATION

The Chardon25kV&28kV Class Fused Loadbreak Elbow Connector combines a fully-shielded and insulated loadbreak elbow with full rangecurrent-limiting fuse protection. The Chardon Fused Loadbreak Elbow Connector provides a convenient and cost effective meth od to add fusing protection to underground d istribution systems utilizing 200 A,25 kV Clas s loadbreak bushings. Designed as a hot stick operable switching device,it is tested at the maximum fuse rating in accordance with the IEEE 386-2006 standard. The product is fully sealed and submersible. Chardon Fused Loadbreak Elbow Connectors are molded using high quality peroxide-cured EPDM rubber, manufactured in Chardon's facilities, under strict quality controls. Standard features include a copper probe adapter, bi-metal connector, plated copper loadbreak probe and a stainless steel reinforced pulling-eye. The product is designed to accept a wide range of cable conductor and insulation sizes. Chardon Fused Loadbreak Elbow Connectors are the ONLY fused elbow connectors on the market that can accept fuses manufactured by Cooper Power Systems (Eaton) and Hi-Tech (ABB). This is accomplished by ordering the appropriate lug kit. This feature allows the customer an option which is not available on competitive products.

PRODUCTION TESTS

Tests conducted in accordance with IEEE/ANSI Standard 386.

- Partial Discharge – 19 kV ≤5pC
- AC 1 Minute Withstand – 40 kV
- Test Point Voltage Test

Tests conducted in accordance with Chardon manufacturing process requirements:

- Physical Inspection
- Periodic Dissection
- Periodic X-ray Analysis

VOLTAGE RATINGS

	25-LFE200	28-LFE200
Voltage Class	25 kV	28 kV
Max. Rating Phase to Phase	15.2kV	16.2kV
Max. Rating Phase to Ground	15.2 kV	16.2 kV
AC 1 Minute Withstand	40 kV	45 kV
DC 15 Minute Withstand	78 kV	/
BIL and Full Wave Crest	125 kV	125 kV
Partial Discharge	19 kV ≤5pC	21.5 kV ≤5pC

· 25&28LFE200-111226-REV03

CURRENT RATINGS

Description	Test Parameters
Continuous	Fuse rating
Switching	10 operations at 200 amps rms at 26.3 kV
Fault Close	10,000 amps rms symmetrical at 26.3 kV for 0.17 s after 10 consecutive successful switching operations

DETAILED COMPOSITION OF THE CHARDON 25KV&28KV LOADBREAK FUSE ELBOW

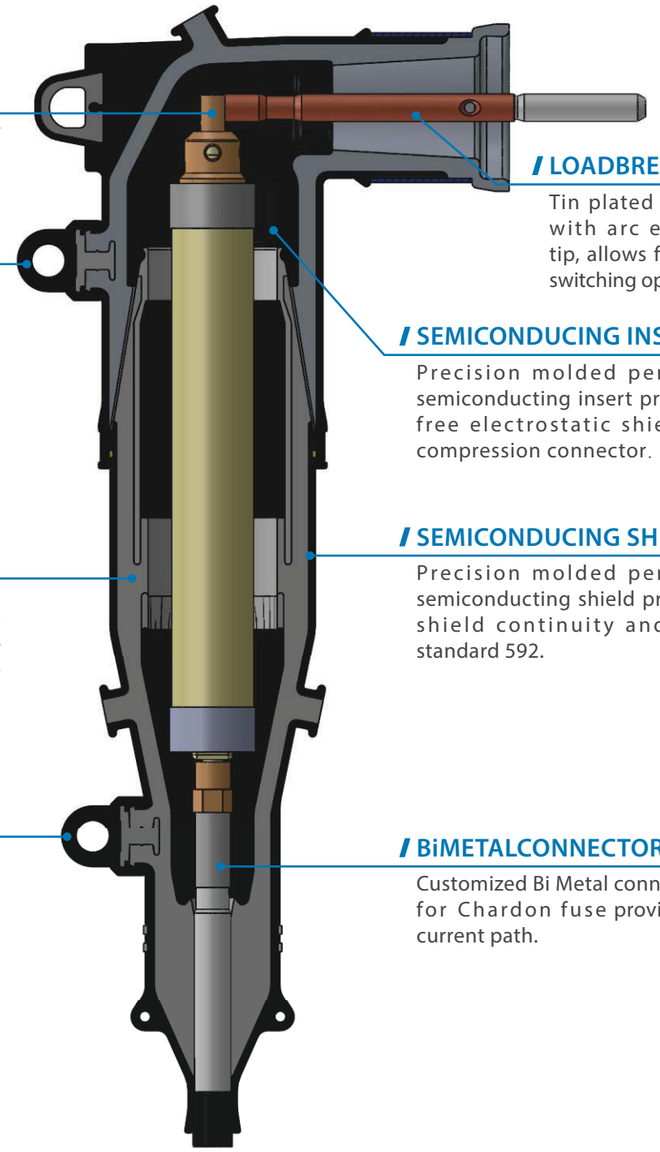

Fig 1: Detail Chardon Fuse Elbow Composition (Chardon fuse installed)

DETAILED COMPOSITION OF THE CHARDON 25KV LOADBREAK FUSE ELBOW

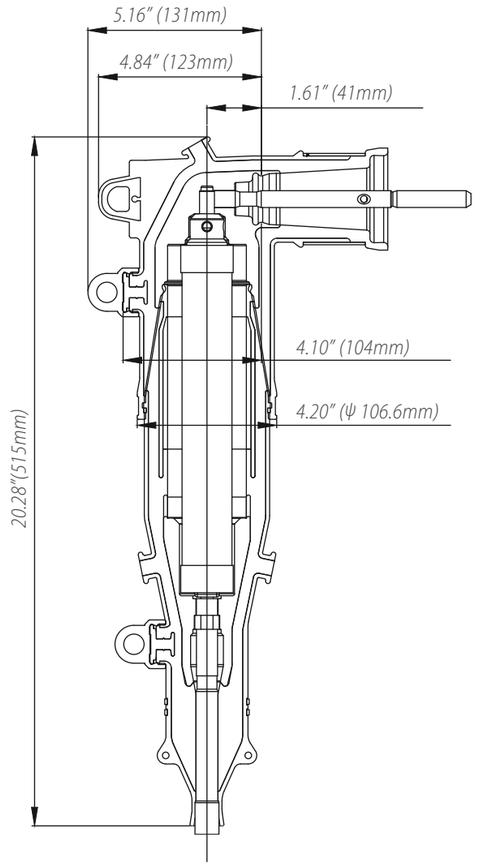

Fig 2: Dimension Info When Chardon Fuse Installed.

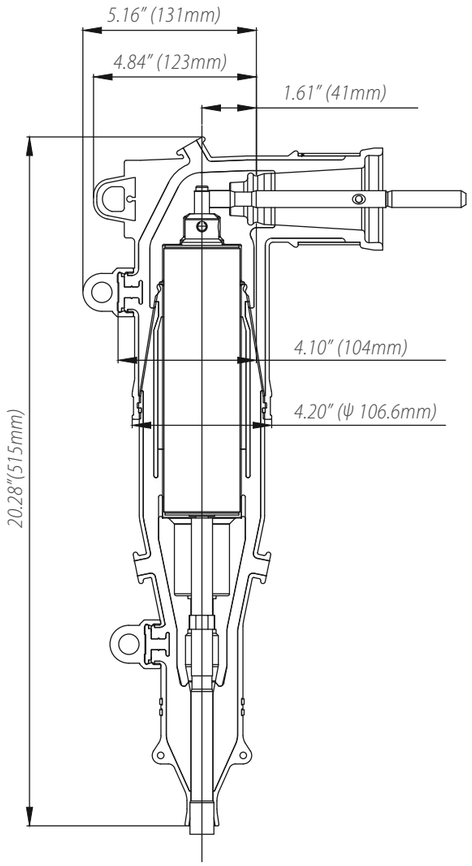

Fig 3: Dimension Info When Hi-Tech Fuse Installed.

ORDERING INFORMATION

Chardon Loadbreak Fuse Elbow kits are packaged in a heavy duty plastic bag.

Each elbow kit includes the following:

- Fused Elbow, Cable Housing
- Fused Elbow, Elbow Housing
- Compression Lug Kit
- Probe
- Hex Wrench
- Silicone Grease
- Towel
- Installation Instruction Sheet

Note:
Current-limiting fuses sold separately. See "Chardon Fuses " below for fuse recommendations, electrical ratings and catalog numbers.

To order a Chardon 25 kV Fuse Elbow Kit, follow the steps below:

25-LFE200T	"X"	"Y"	"Z"

"X" = Enter Cable Range Code (A, B, C or D)

"Y" = If a Hi-Tech Fuse will be used in the Fused Elbow, Enter "HE".
If a Chardon will be used in the Fused Elbow, Enter "CH"

"Z" = Enter Conductor Code (See Conductor Code Table Below)

Range Code	Inches	Millimeters
A	0.610 - 0.823	15.50 - 20.90
B	0.720 - 0.985	18.29 - 25.02
C	0.920 - 1.185	23.37 - 30.10
D	1.040 - 1.305	26.42 - 33.15

Conductor Code Table

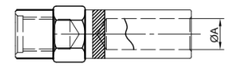

CONDUCTOR CODE	Concentricor Compressed		Compactor Solid		Inner Diameter ØA (mm)
	AWG or kcmil	mm²	AWG or kcmil	mm²	Bi-metal Lug
01	#6	-	#4	-	5.13
02	#4	-	#3	25	6.55
03	#3	25	#2	35	7.32
04	#2	35	#1	-	8.13
05	#1	-	1/0	50	9.09
06	1/0	50	2/0	70	10.20
07	2/0	70	3/0	-	11.35
08	3/0	-	4/0	95	13.33
09	4/0	95	250	120	14.00
10	250	120	300	-	15.21

Example :
To order a Chardon 25 kV Loadbreak Fused Elbow with a cable insulation diameter of 0.850", using a Hi-tech fuse, and a 3/0 compression connector, order the following number : 15-LFE200T-B-HE08 .

Replacement Parts

Compression Lug Kit	Part Number
Hi-Tech Fuse Compression Lug	LFEK-HTH + Conductor Code
Cooper Fuse Compression Lug	LFE-CPS + Conductor Code
Chardon Fuse Compression Lug	LFE-CH + Conductor Code

Note:
Elastimold, Hi-Tech, Easton and Cooper, these brand names are property of their respective owners. All company , product and service names used in this catalog/ instruction sheet, are for identification purposes only.Use of these names, logos, and brands does not imply endorsement.

CHARDON FUSES

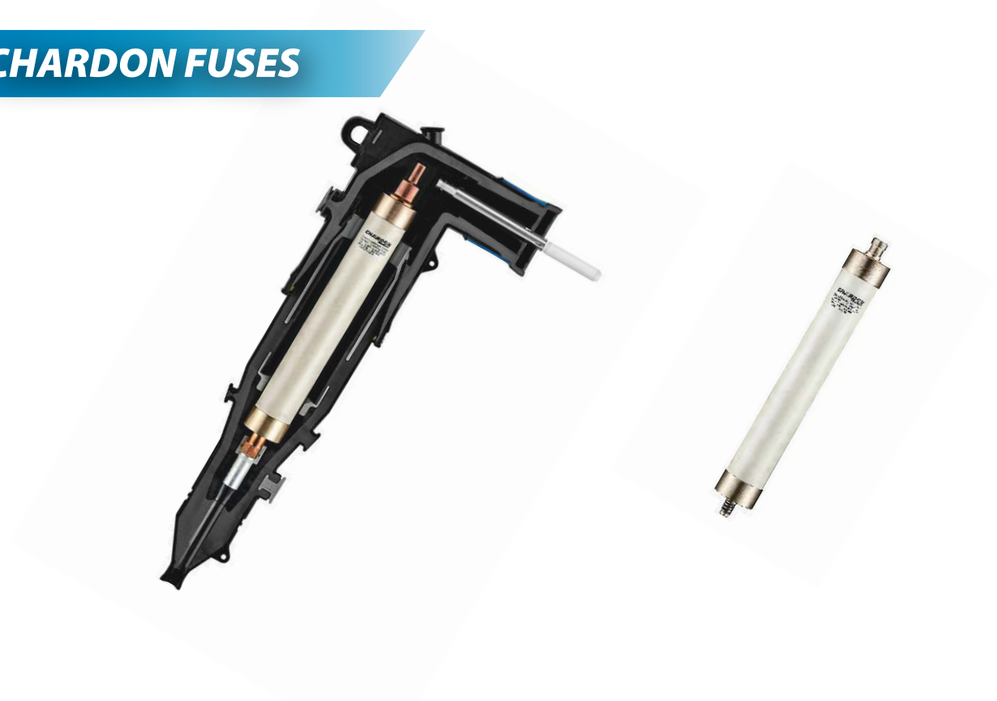

Table 1: Electreical Characteristics of the Elbow Fuses and Catalog Numbers

Electrical Characteristics of the Elbow Fuses									
Voltage Class System (kV)	Nominal Fuse Voltage Rating(kV)	Nominal Fuse Current Rating(A)	Fuse Catalog Number	Minimum Melt I^2t (A^2s)	Maximum Total I^2t (A^2s)	Peak Arc Voltage (kV)	Maximum Continuous Curren (A)		
							25°C	40°C	65°C
25	15.5	6	CHFEF155006	1410	4040	40	7.7	7.3	6.8
		8	CHFEF155008	1565	4360	40	8.3	7.9	8.5
		10	CHFEF155010	1760	4750	40	12.9	12.3	11.5
		12	CHFEF155012	1850	5350	40	15.7	15.2	14.6
		18	CHFEF155018	1950	8750	38	23.2	22.3	21.3
		20	CHFEF155020	2120	9090	38	23.3	22.3	21.4
		25	CHFEF155025	6049	12088	38	29.0	28.0	26.8
		30	CHFEF155030	7657	15300	38	34	33	30.6
		40	CHFEF155040	12940	25680	38	45.0	44.0	40.8

Noted： If a 50A fuse is to be installed, please refer to model 28-LFE200T on the next page.

Table 2: Recommended Fuse Current Ratings for Transformer

Recommended Fuse Current Ratings for Transformer								
Nominal Fuse Rated Voltage	15.5kV							
1-Phase Transformer kVA	1-Phase Voltage Rating (kV) - Phase to Ground							
	12&12.47		13.2		13.8		14.4	
	A	B	A	B	A	B	A	B
10		6		6		6		6
15		6		6		6		6
25		6		6		6		8
37.5	6	8	6	8	6	6		6
50	8	10	8	10	8	10	8	10
75	12	12	10	12	10	12	10	12
100	12	18	12	18	12	12	12	12
167	20		20		20		20	

3-Phase Transformer kVA	3-Phase Voltage Rating (kV)-Phase to Phase			
	20.8		22.9 to 24.9	
	A	B	A	B
75		6		6
100	6	6		6
112.5	6	8	6	6
150	8	10	8	10
225	10	12	10	12
300	12	18	12	18
500	20	20	18	20

Note:
(1) Fuses election is based on the continous current rating of the fuses at 40°C. Fuses in listed Column A allow between 1.4 and 2 times the rated current of the transformer; those listed in Column B, allow 2 to 3 times the rated current of the transformer.
(2) Recommended fuses meet in rush criteria of 12 times transformer gull load current for 0.1 second and 25 times full load current for 0.01second.
(3) Fuses meet cold load pick up criteria of 6 times transformer full load current for 1 second and 3 times full load current of 10 seconds.

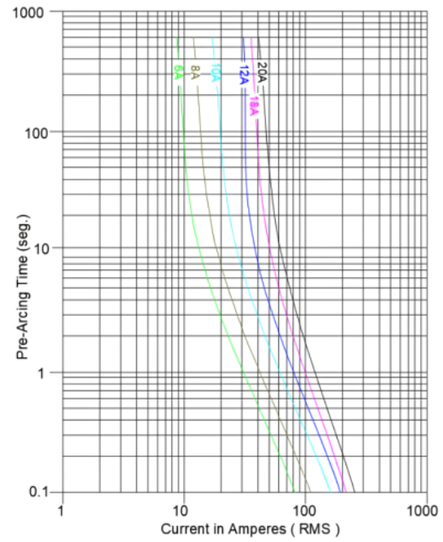

To order a Chardon 28 kV Fuse Elbow Kit, follow the steps below:

28-LFE200T	"X"	"Y"

"X" = Enter Cable Range Code (C,D,E orF)

"Y" = Enter Conductor Code (See Conductor Code Table Below)

Range Code	Inches	Millimeters
C	0.846 - 1.051	21.50 - 26.70
D	0.976 - 1.181	24.80 - 30.00
E	1.087 - 1.311	27.60 - 33.30
F	1.232 - 1.469	31.30 - 37.30

Noted :
Lug selection: refer to the specification sheet of 25-LFE200 above.

DETAILED COMPOSITION OF THE CHARDON 28KV LOADBREAK FUSE ELBOW

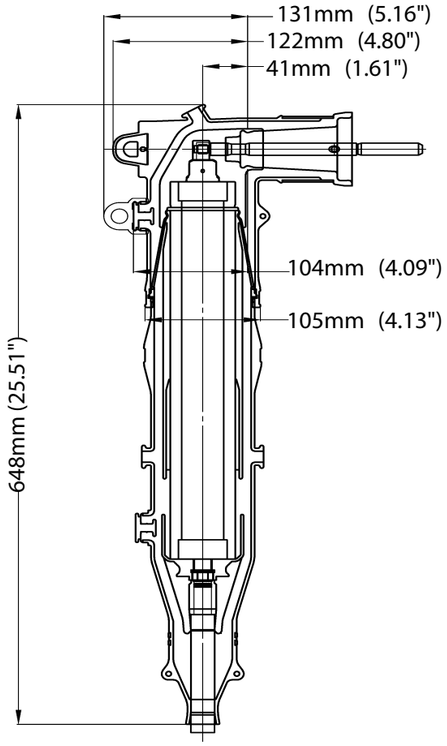

Electrical Characteristics of the Elbow Fuses

Voltage Class System (kV)	Fuse Voltage Rating (kV)	Fuse Catalog Number	Fuse Current Rating (A)	Pre-arc I^2t	Clearing I^2t	Peaking Capacity (kA)	voltage (kV)
35	21	CHFEF230001	1	18	150	50	64
		CHFEF230003	3	160	787	50	64
		CHFEF230006	6	600	3150	50	64
		CHFEF230010	10	900	4650	50	64
		CHFEF230015	15	1380	11000	50	64
		CHFEF230020	20	1680	13000	50	64
		CHFEF230025	25	3660	23800	50	64
		CHFEF230030	30	5390	13800	50	60
		CHFEF230040	40	6240	16856	50	60
		CHFEF230050	50	10000	24900	50	60

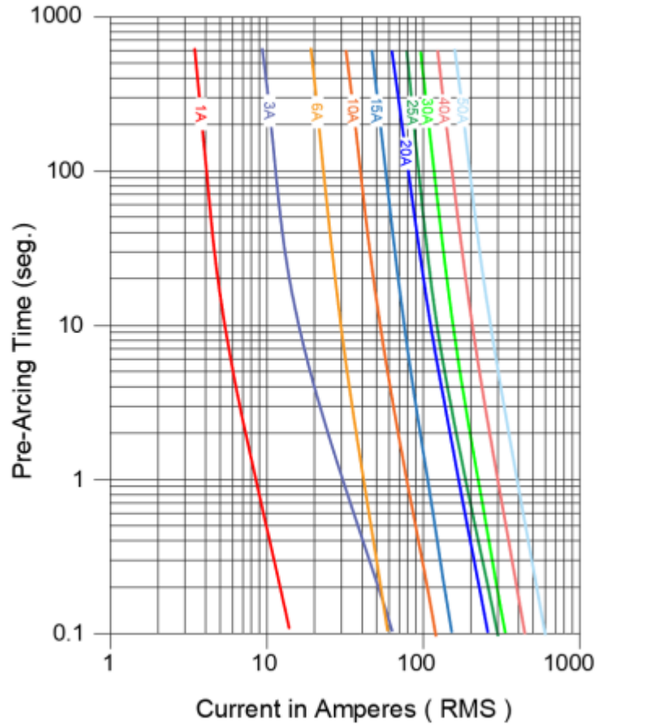



ANHUI CHARDON ELECTRIC LTD.

No.808 Taiji Road Economic Develop Zone of Guangde County
Anhui China
Tel: 0563-2216688
Fax: 0563-2251806

CHARDON TAIWAN CORPORATION

No.37 Min-Chie Road, Tung Lo Industrial Park, Miao Li, Taiwan 366
Tel:+886-37-984385
Fax:+886-37-984770

SHANGHAI CHARDON ELECTRIC LTD.

Room 1202, office building No.399, Yun Gu Road,Jiading district,
Shanghai, China 201801
Tel: +86-21-39105900
Fax: +86-21-39105916

www.chardongroup.com·info@chardongroup.com